Submersible Averaging Enclosures

Temperature Sensors

Rev. 05/17/23

No Box (NB)

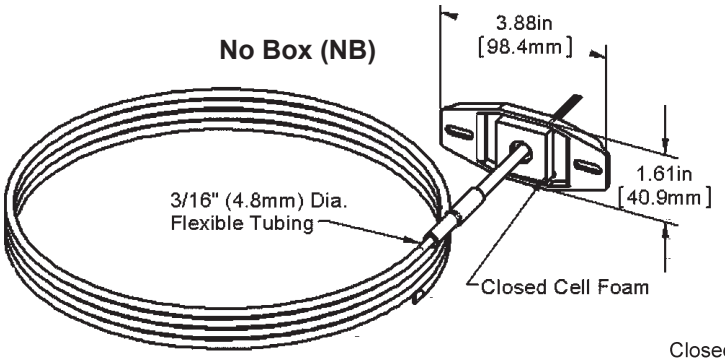

Junction Box (Standard)

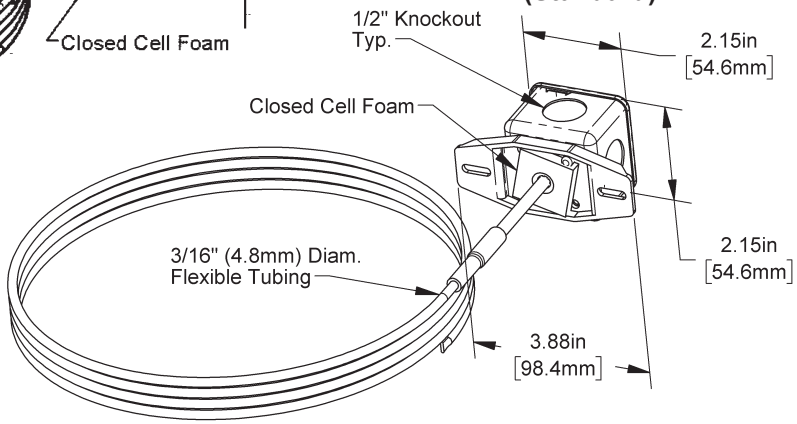

BAPI-Box Crossover (BBX)

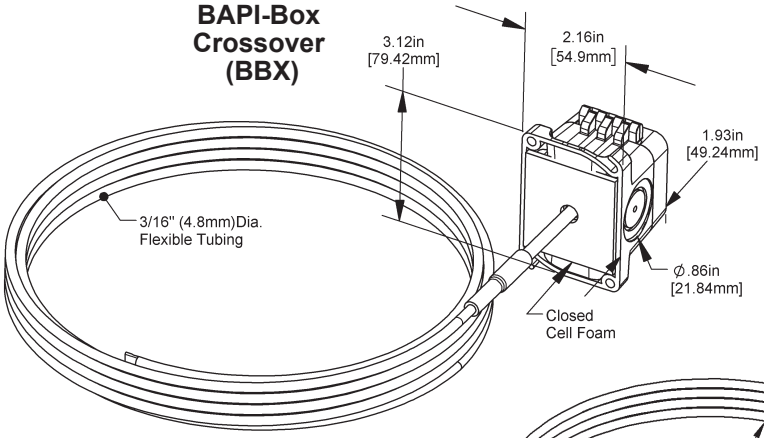

BAPI-Box (BB)

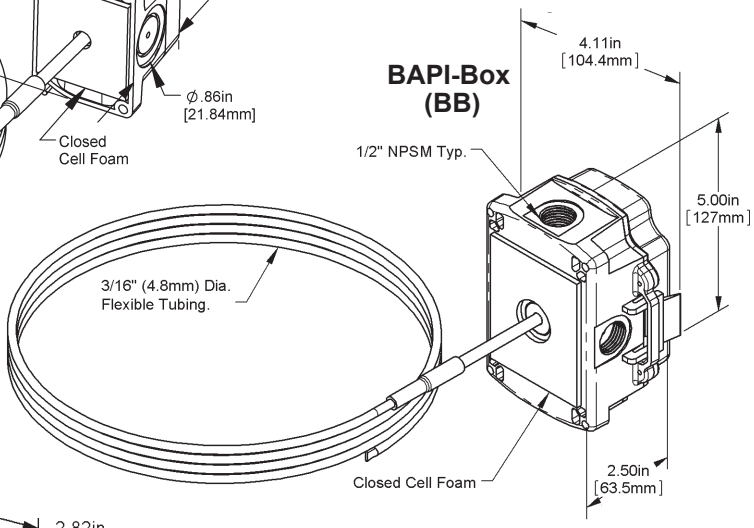
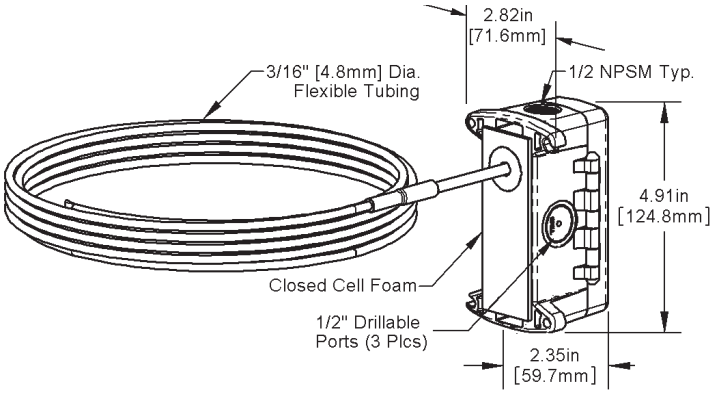
BAPI-Box 2 (BB2)